LIPPMANN
MILWAUKEE, INC.

LARGE MODEL HEAVY-DUTY JAW CRUSHERS

LIPPMANN MASSIVE LARGE MODEL JAW CRUSHERS

MAXIMUM CAPACITY, HEAVIER, STRONGER, MORE RELIABLE – SIMPLY BETTER THAN THE COMPETITION.

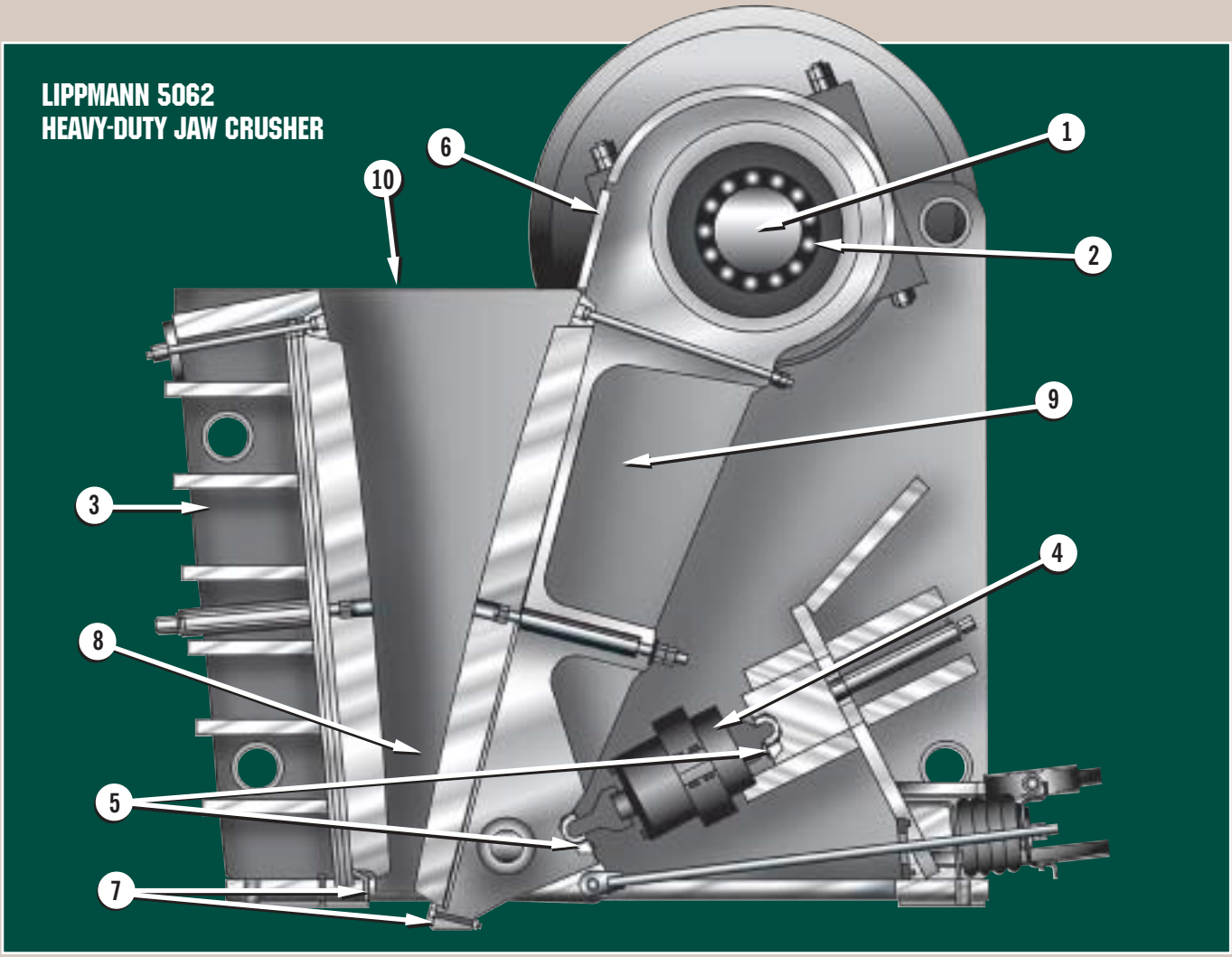

When you need a truly massive jaw unmatched in reliability, high capacity, and high productivity, you need a Lippmann. Lippmann's range of large model jaws includes a 5062, 4248, 3650 and 3048 to suit your particular heavy duty, high volume crushing application. Compare a Lippmann jaw with any other jaw on the market. Immediately you'll see the shaft and other components are larger, the frame much heavier. Everything about it tells you this machine was built for demanding production, strength and a lifetime of dependability.

1. **Huge oversized heat treated shafts forged of special alloy to handle overloads and hard material.**
2. **Extra large, radial thrust tapered roller bearings absorb and withstand extreme shock, radial and thrust loads and offer substantially more bearing life than competitive models.**
3. **Much heavier, stronger, massive one piece frame, stress-relieved for optimum reliability.**
4. **Hydraulics save countless hours and allow setting to be adjusted while crushing. Standard on 5062, available as an option on other model jaws.**
5. **Toggle bearing wedges for easy in, easy out bearing replacement.**
6. **Hardened barrel wear liners protect the pitman.**
7. **Replaceable toe wear liners on swing and stationary jaw.**
8. **Larger stroke, deeper crushing motion, steeper nip angle means higher capacity and greater throughput.**
9. **One piece cast pitman stands up to the most demanding crushing applications.**
10. **True feed opening.**

SUPERIOR FEATURES, OPTIMUM SERVICE LIFE

HYDRAULIC ADJUSTMENT UNDER LOAD. INNOVATIVE, REPLACEABLE WEAR PARTS.

HYDRAULIC ADJUSTMENT

Hydraulic jaw toggle cylinders save countless hours normally required when manually adjusting the jaw setting for different aggregate sizes or a plugged jaw cavity. You can expect to increase production rates, since operators can adjust the jaw as frequently as jaw wear dictates. Consistent setting ensures properly sized material is produced. A pressure relief system safe guards from uncrushable materials.

Tension rod air springs maintain pre-set loading on tension rods regardless of setting. Air springs ensure sufficient tension force is maintained to securely hold hydraulic cylinders in position. Therefore you can adjust the Lippmann jaw setting while operating under load, unlike other competitive jaws. Hydraulics standard on 5062, available as an option on other models.

TOGGLE BEARING WEDGES

The wedge effect holds the toggle bearing in on both the pitman and block. Bolt-in bearing removal and replacement is incredibly easy.

FINITE ELEMENT ANALYSIS

Maximum strength at all stress points is necessary to assure strong, trouble-free crusher operation. To this end, extensive stress analysis is preformed using finite element analysis techniques along with classical engineering mechanics.

MASSIVE OVERSIZED ECCENTRIC SHAFT

Massive, oversized, heat-treated shaft forged of special alloy to provide an exceptionally large eccentric throw and to handle overloads and hard materials.

SUBSTANTIALLY MORE BEARING LIFE

Our heavy duty, premium quality, oil lubricated tapered roller bearings offer substantially more bearing life and feature adjustable clearance, line contact, true rolling motion and ability to carry severe radial and thrust loads.

BETTER MOTION, INCREASED CAPACITY, GREATER REDUCTION RATIO

Non-choking design. A forced feeding action results from a larger eccentric inward and downward movement of the swing jaw. Longer jaws mean a reduction in nip angle and more positive bite.

BARREL LINERS

400 Brinell replaceable wear liners protect the pitman under the most demanding crushing applications.

TOE LINERS

Replaceable toe liners on both the swing jaw and stationary jaw. Lippmann designs their jaw crushers for maximum wear life and productivity.

LIPPMANN MILWAUKEE, INC.

THE NAME YOU SHOULD KNOW FOR QUALITY CRUSHING MACHINERY

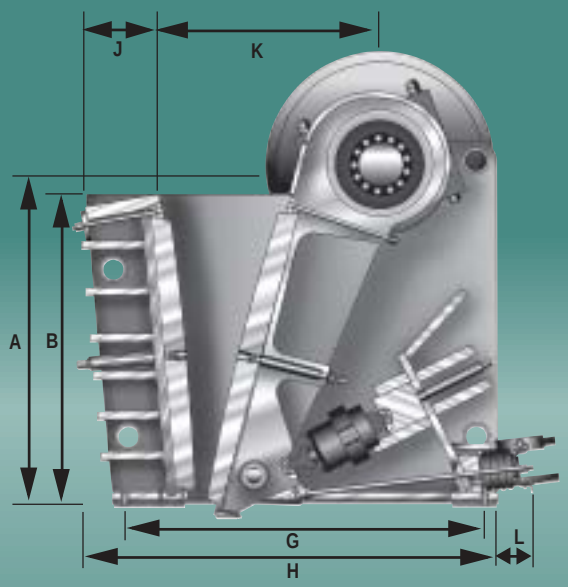

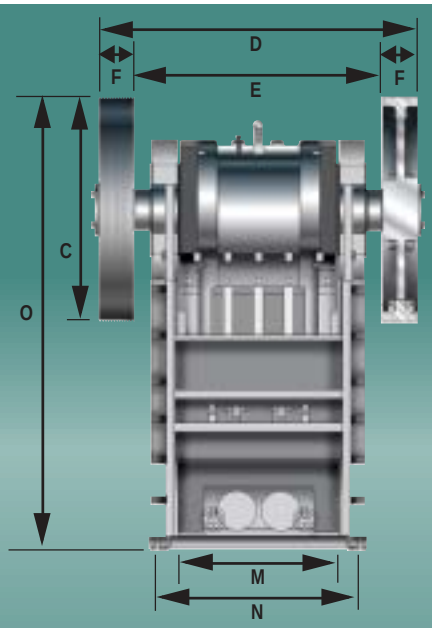

LIPPMANN HEAVY-DUTY JAW CRUSHER DIMENSIONS

Size	A	B	C	D	E	F	G	H	J	K	L	M	N	O	MOUNTING BOLT DIA.	WEIGHT
30x48	75	70	60	98	65-1/2	16-1/4	84	96	18	53	21	49-1/2	61	105	2"	62,819
36x50	89-1/2	82	60	101-1/2	69	16-1/4	103	113	19-3/4	64-1/8	20	50	63	119	2"	87,692
42x48	113-1/2	107	68	111-1/4	69-1/4	21	114	126-1/4	21-5/8	70-7/8	24-5/8	49-1/2	61	147-1/2	2"	129,596
50x62	130-5/8	119-3/8	87	123	95	14	136-5/8	156-3/8	28	84	19	62	77	174-1/8	2-1/2"	211,500

LIPPMANN HEAVY-DUTY JAW CRUSHER CAPACITIES IN TONS

Size	Elec. Hp	3"	3-1/2"	4"	5"	6"	7"	8"	10"	12"	14"	16"
30x48	200	205	235	275	343	412	480	598	685			
36x50	250		310	340	425	520	600	680	840	1030	1130	
42x48	250			350	444	540	624	708	876	1068	1188	1320
50x62	300				600	700	850	980	1200	1400	1600	1800

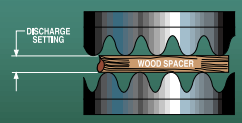

- The above data is based on average feed material weighing 100 lbs. per cubic foot.
- Capacities will vary depending on size of feed, rate of feed, type of material, moisture and clay content and fracture characteristics of feed. Undersize material should be removed from crusher feed to eliminate excessive wear on jaw dies.

Sold & Serviced By:

Lippmann Milwaukee, Inc.
3271 East Van Norman Ave. • Cudahy, WI 53110-0586
(800) 648-0486 • (414) 744-2565 • Fax: (414) 744-8172

MADE IN USA

12/02
Printed in USA